50 min

TB-22-WM

MiroMark
Furniture enterprise

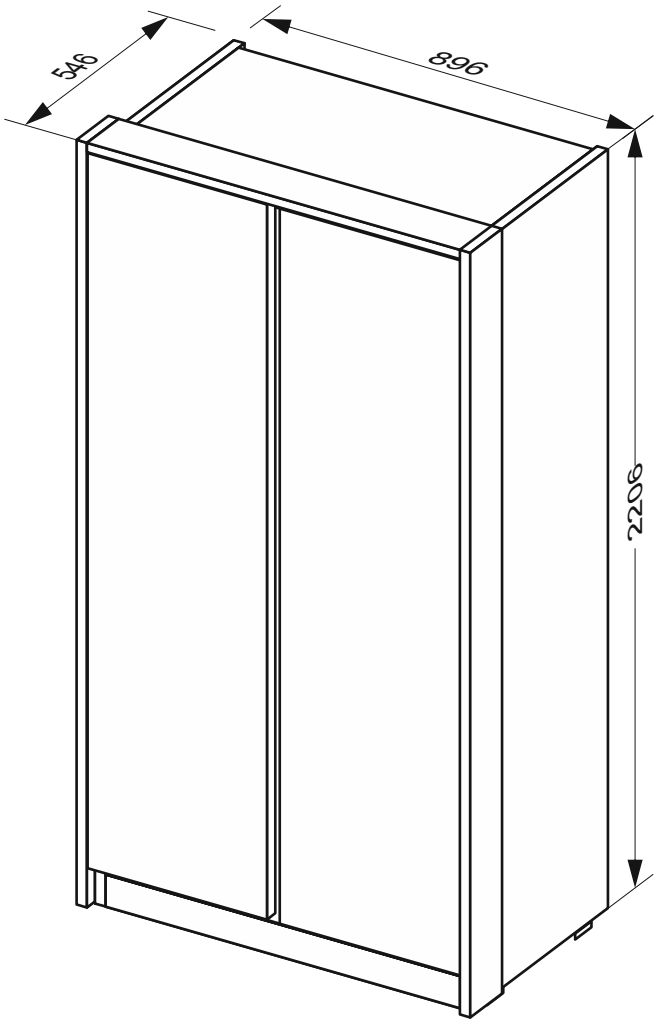

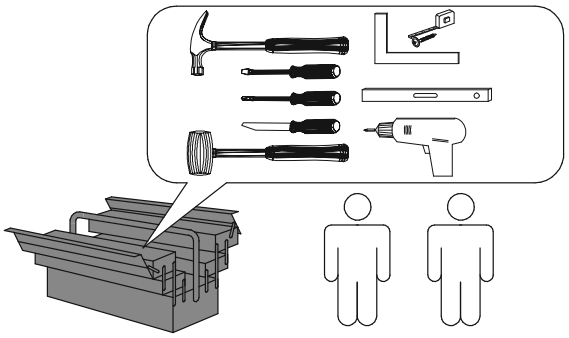

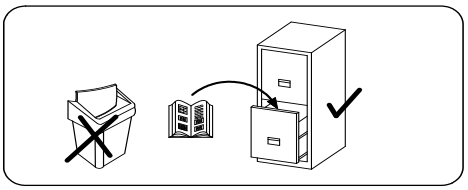

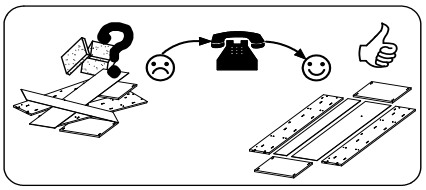

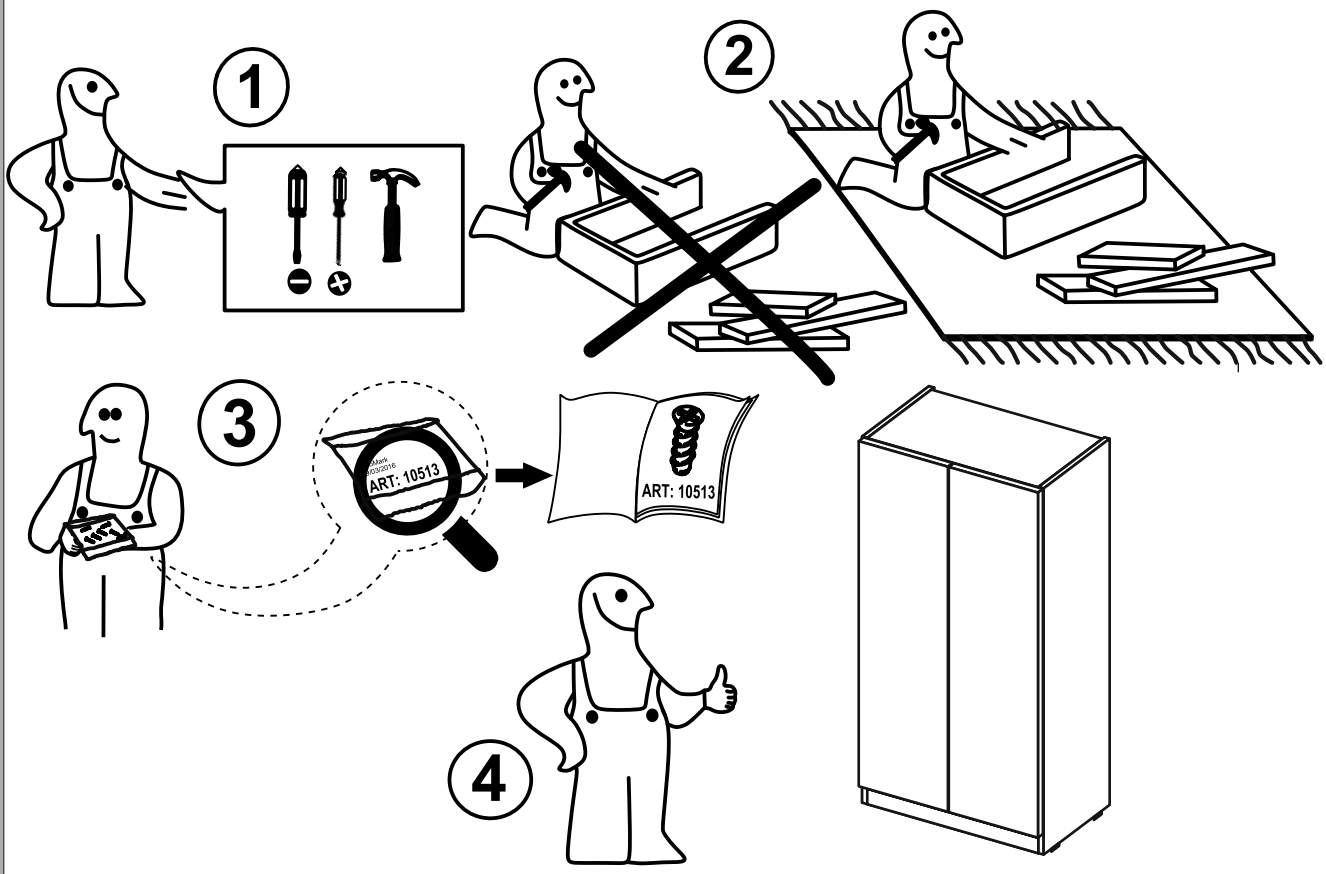

11-IZ-208
(M)

1	∅8x30	x20	21008
2		x4	14010
3	∅4x16	x26	10416
4	35mm B	x4	03360
5	∅6.3x13	x16	10613
6		x10	08003
7		x16	11002
8		x16	11016
9	∅4.2x19	x28	10419
10	∅8x50	x1	10016
11	∅5x60	x1	10443
12		x1	08011
13	∅4.2x13	x2	10413
14	Ø 4	x2	00545
15		x2	05014
16	∅5x9	x4	10509
17		x12	00212
18		x1	07001
19	∅6,4x50	x4	07650
20		x1	08012
3	∅3.5x15	x4	10315
22		x4	01001
23	∅4.2x25	x6	10426
24	35mm A	x4	03359

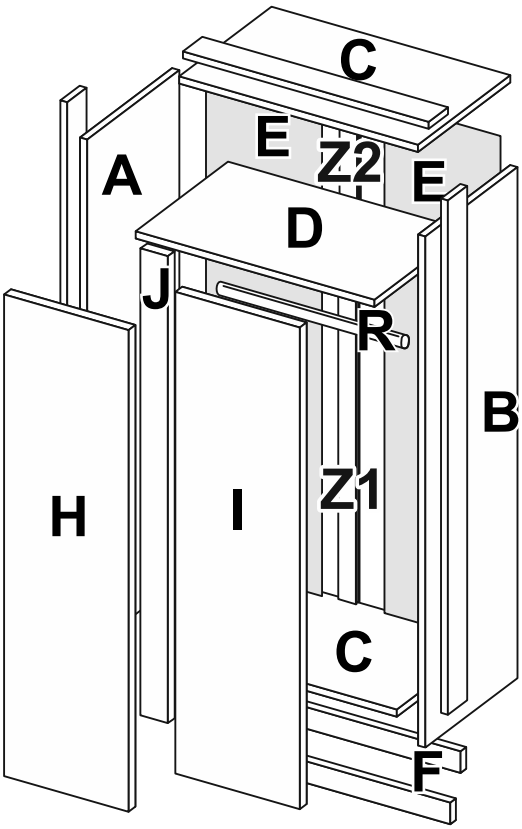

A - 2204 x 530 x 16 - **x 1**
B - 2204 x 530 x 16 - **x 1**
C - 864 x 516 x 16 - **x 2**
D - 864 x 480 x 16 - **x 1**
E - 2152 x 438 x 3 - **x 2**
F - 864 x 50 x 16 - **x 2**
G - 2152 x 438 x 3 - **x 2**
H - 2150 x 434 x 16 - **x 1**
I - 2150 x 434 x 16 - **x 1**
J - 2122 x 80 x 16 - **x 1**
K -2220x150 x 16 - **x 1**
L -2220x150 x 16 - **x 1**
M - 898x150x 16 -**x 1**
R -857мм - **x 1**
Z1-1708мм **x 1**
Z2-394мм **x 1**

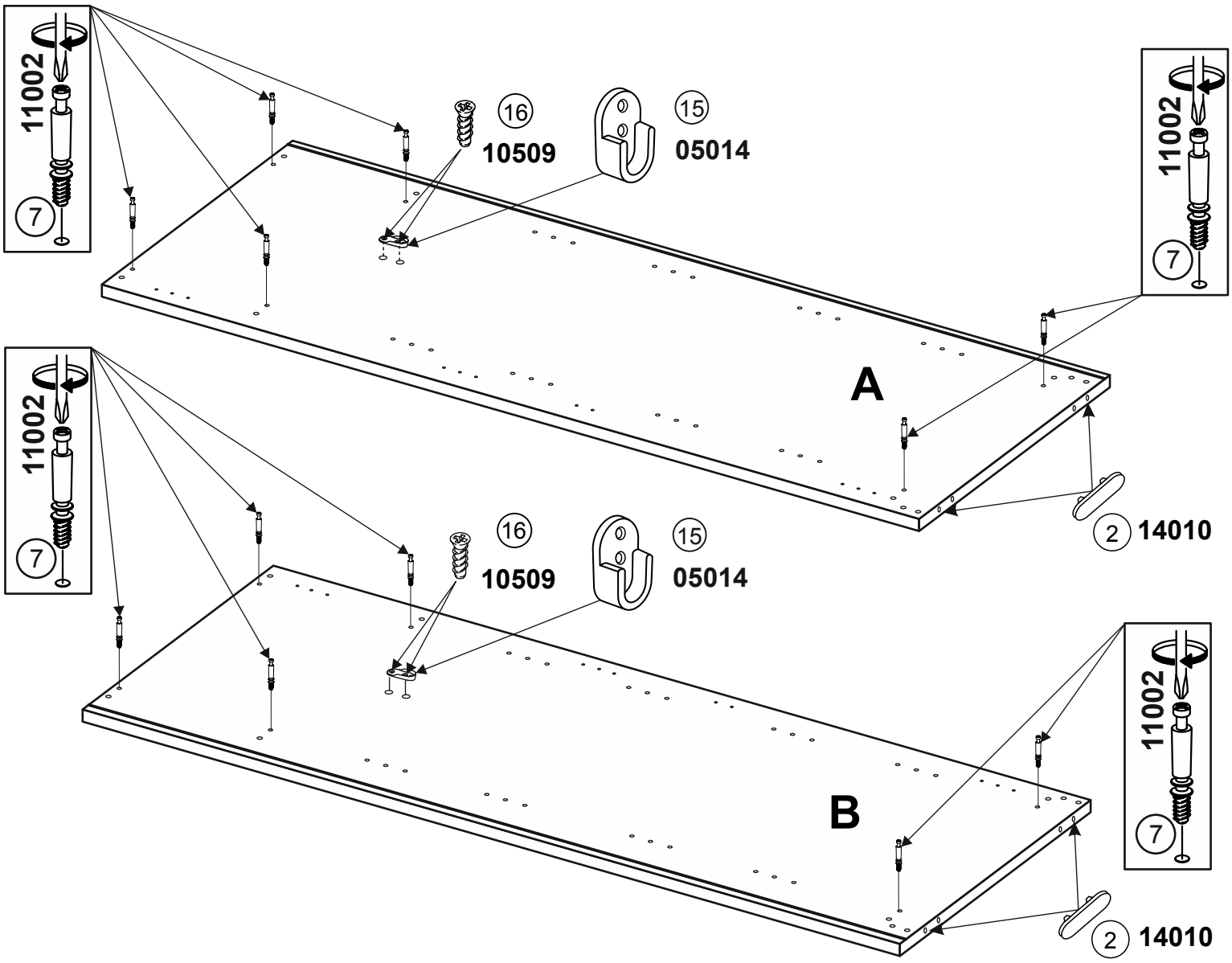
11002
7
16
10509
15
05014
A
2
14010
B

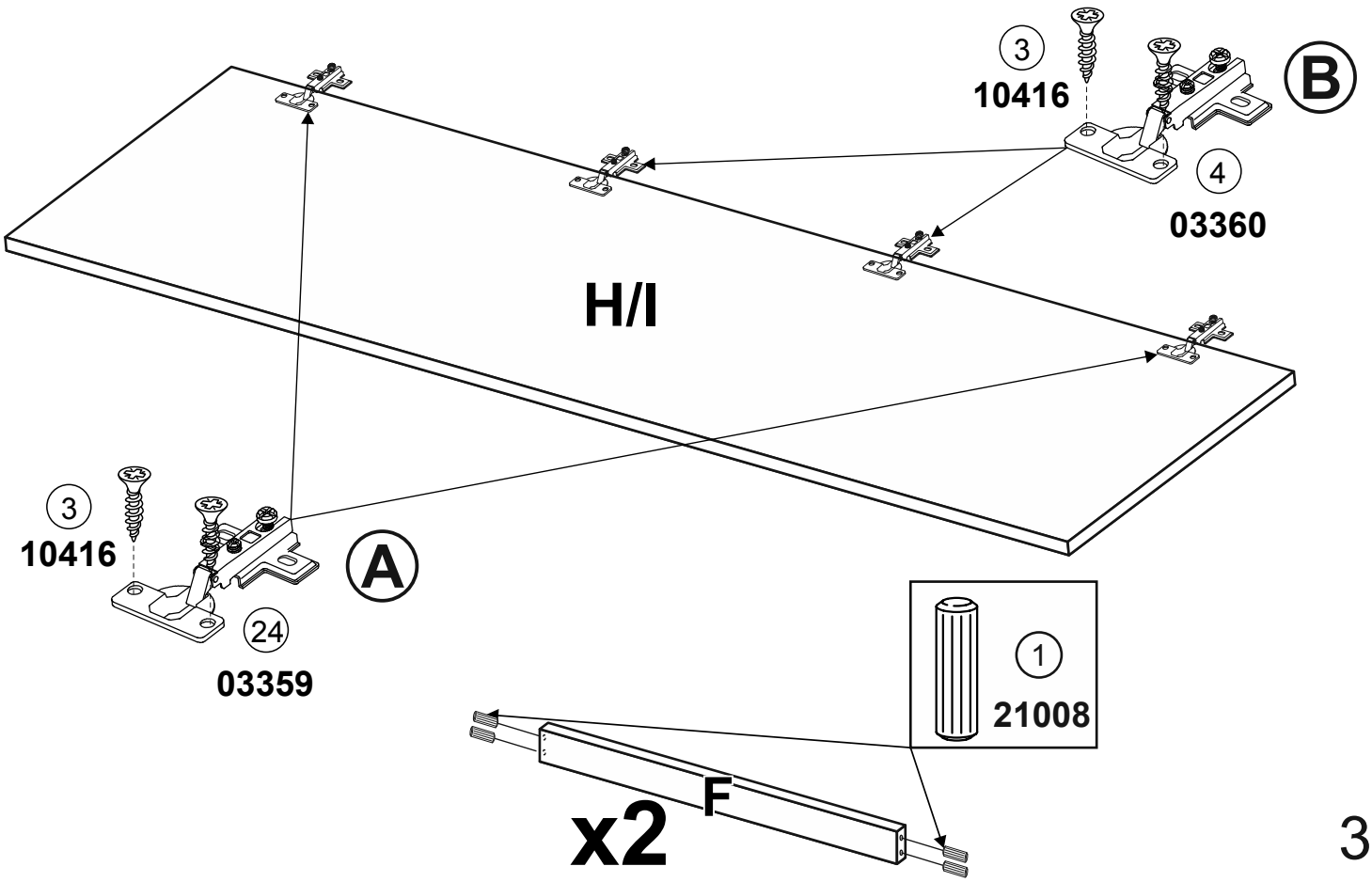
3
10416
B
4
03360
H/I
A
24
03359
1
21008
F
x2

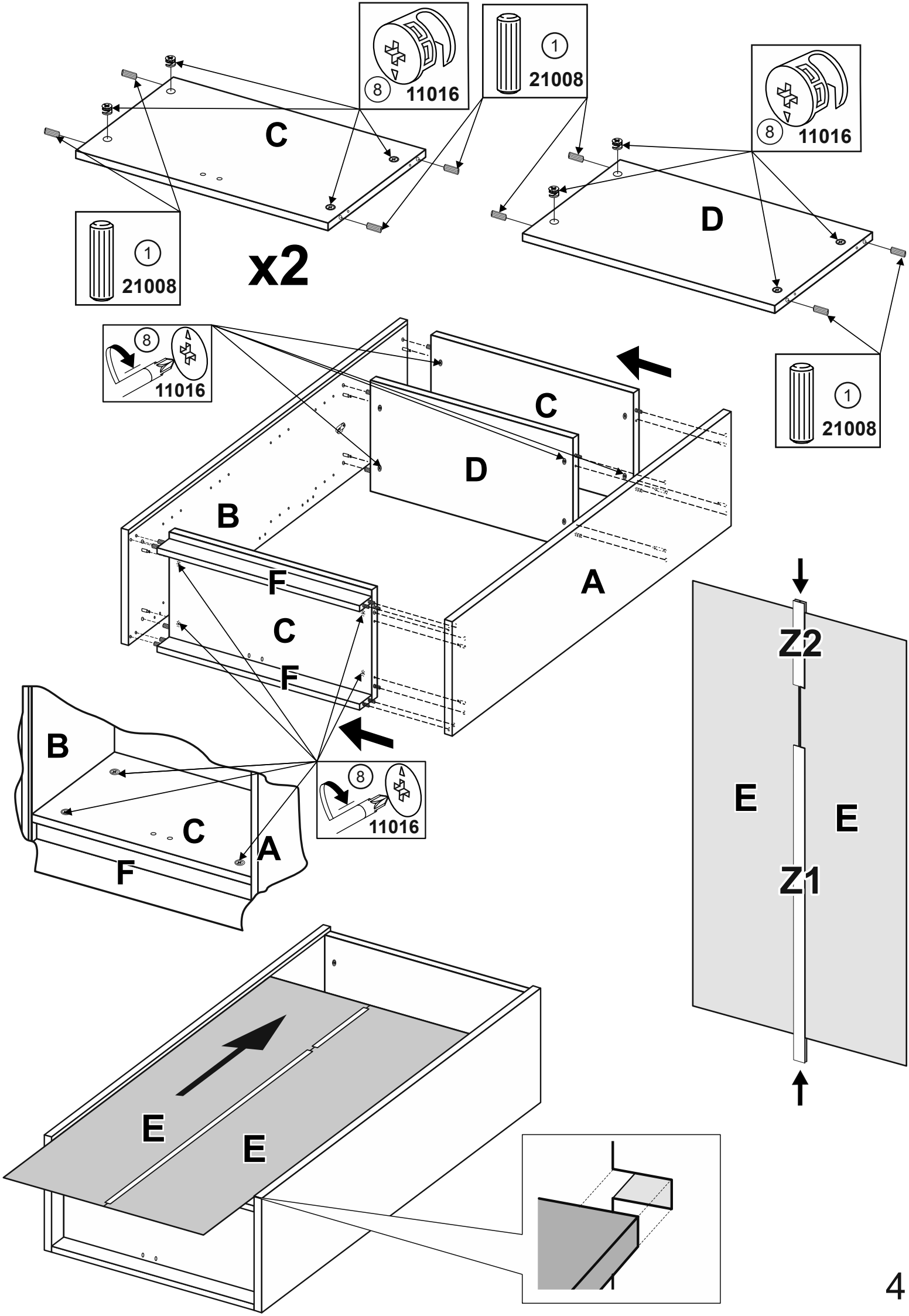
8
11016
1
21008
C
x2
D
B
F
A
Z2
E
Z1

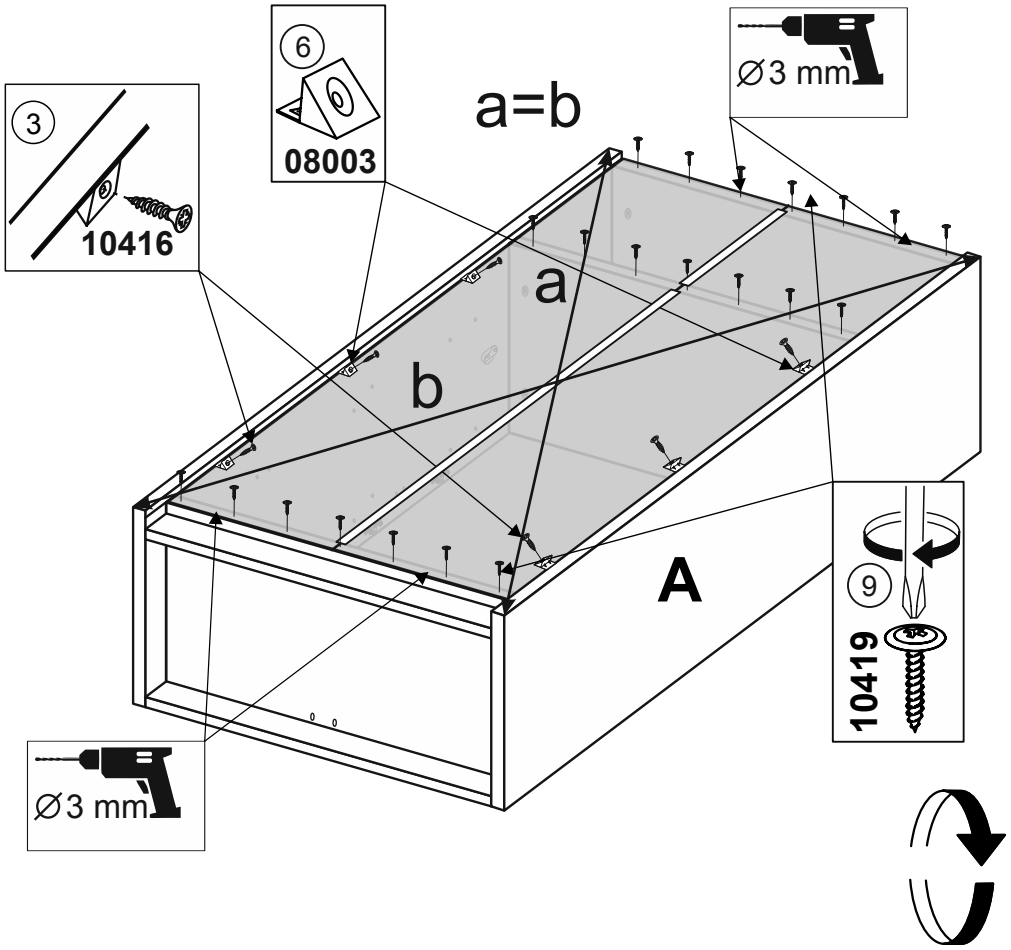
3
10416
6
08003
a=b
∅3 mm
a
b
A
9
10419
∅3 mm

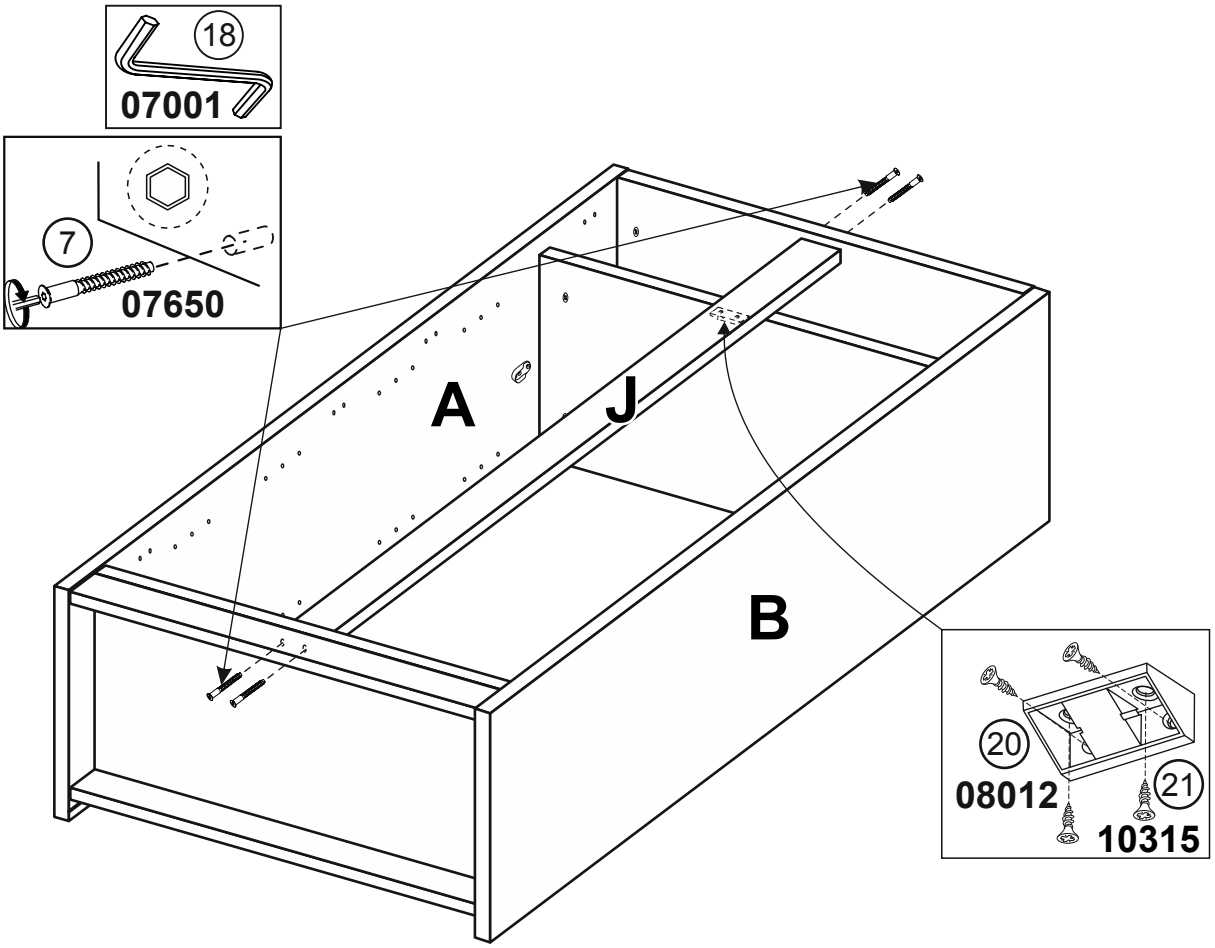
18
07001
7
07650
A
J
B
20
08012
21
10315

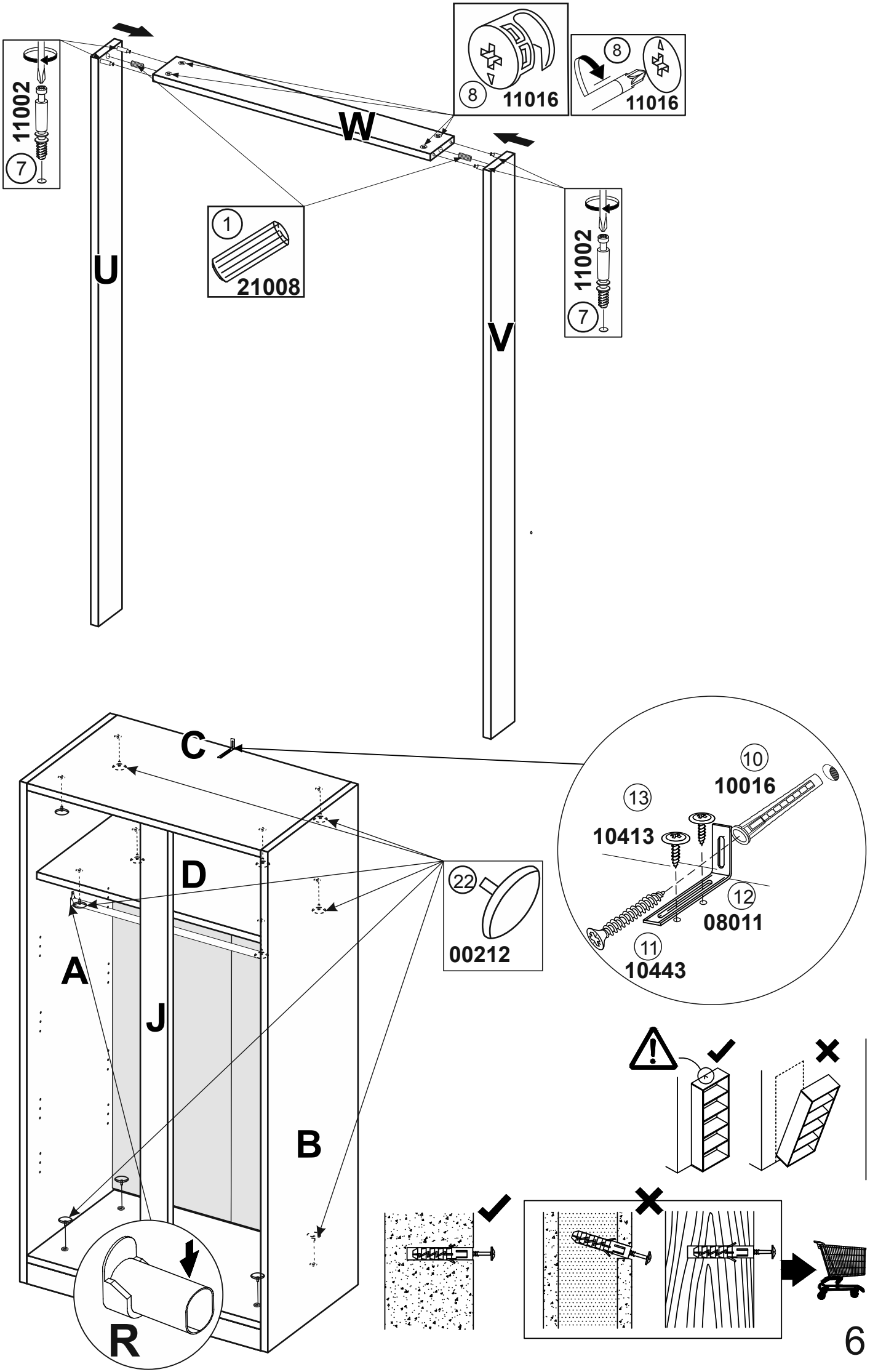
11002
7
8
11016
8
11016
W
1
21008
U
V
11002
7
C
10
10016
13
10413
12
08011
11
10443
22
00212
D
A
J
B
R

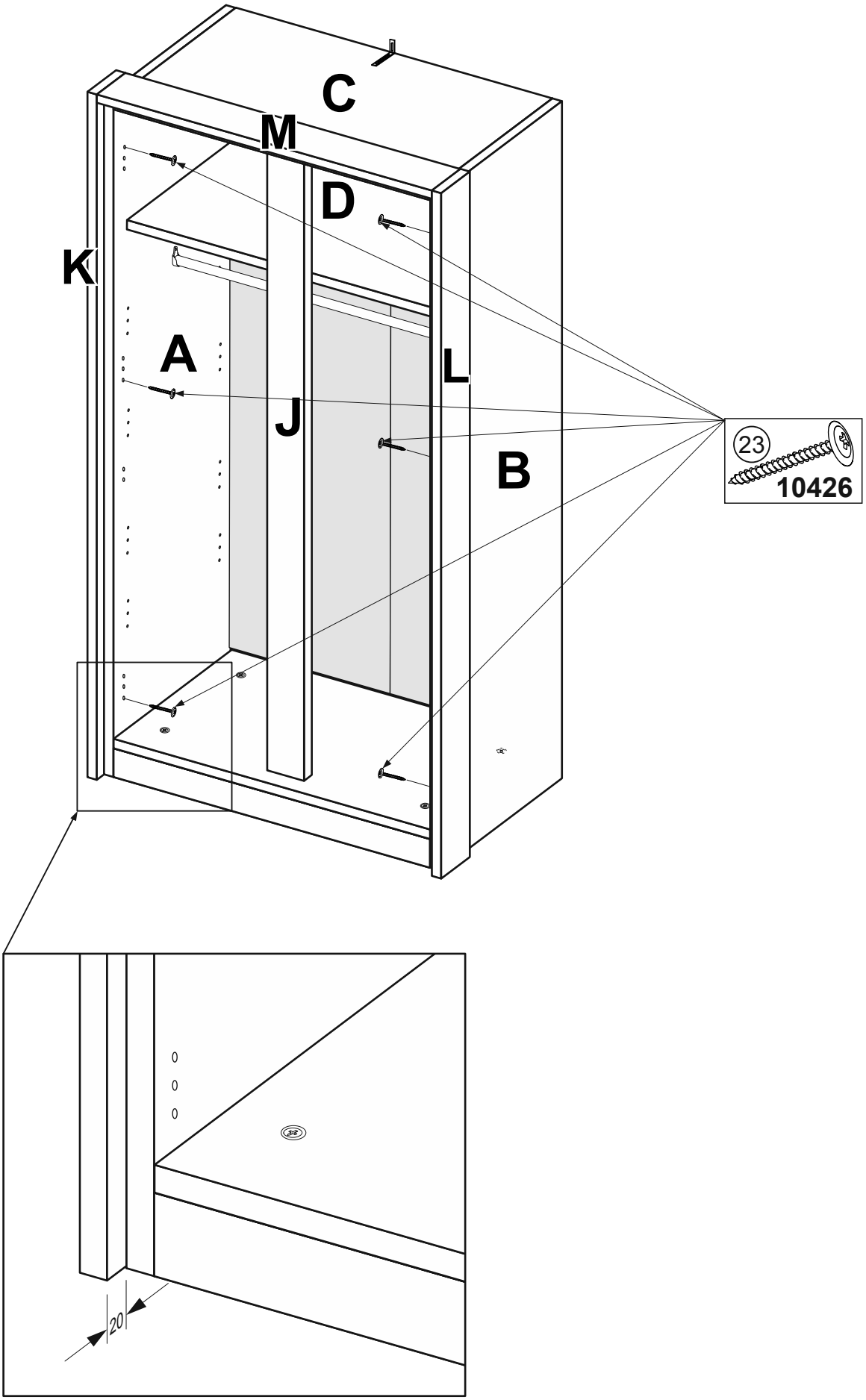
C
M
D
K
A
L
J
B
23
10426
20

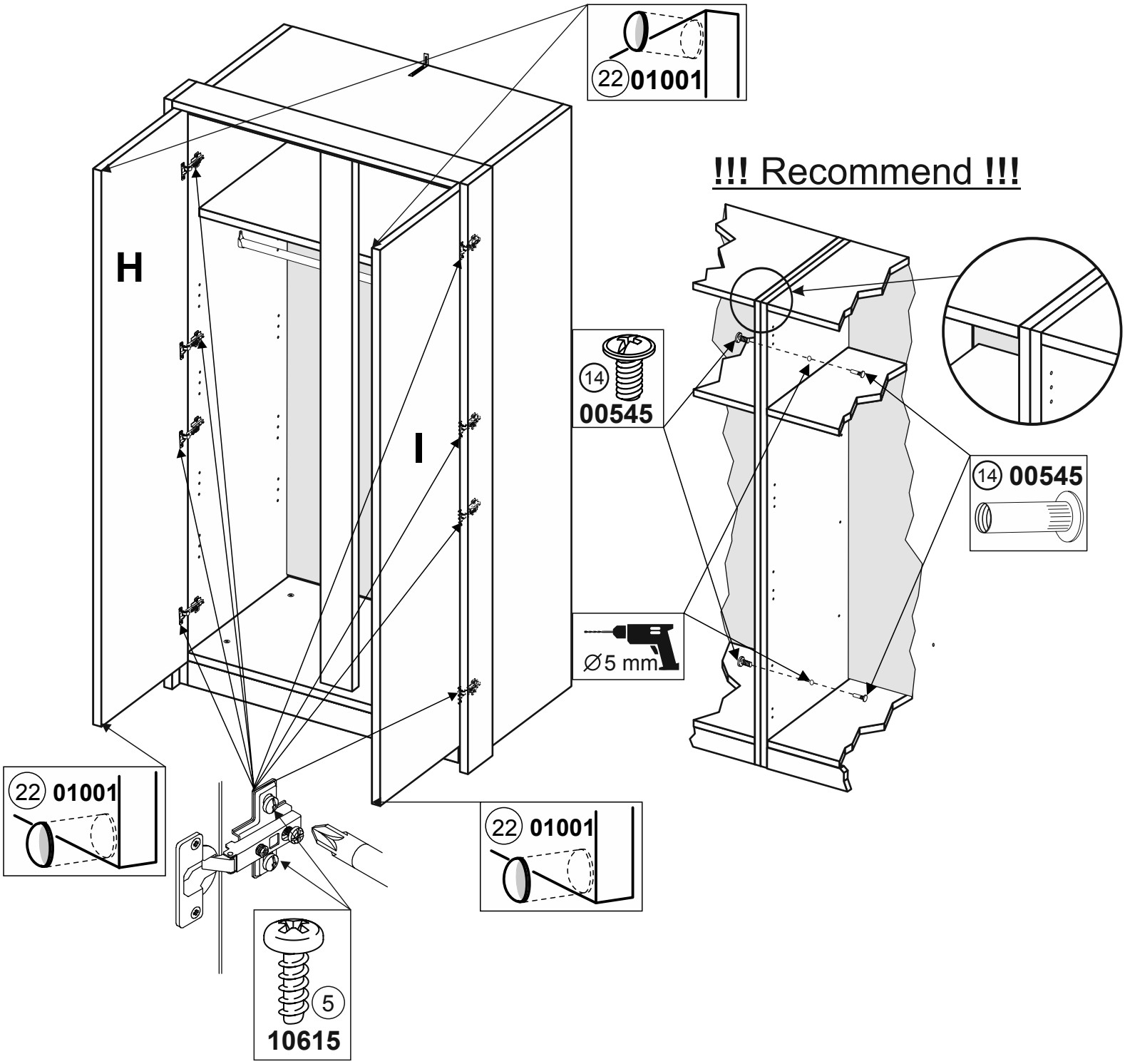
22 01001
!!! Recommend !!!
H
I
14
00545
14 00545
∅5 mm
22 01001
22 01001
5
10615

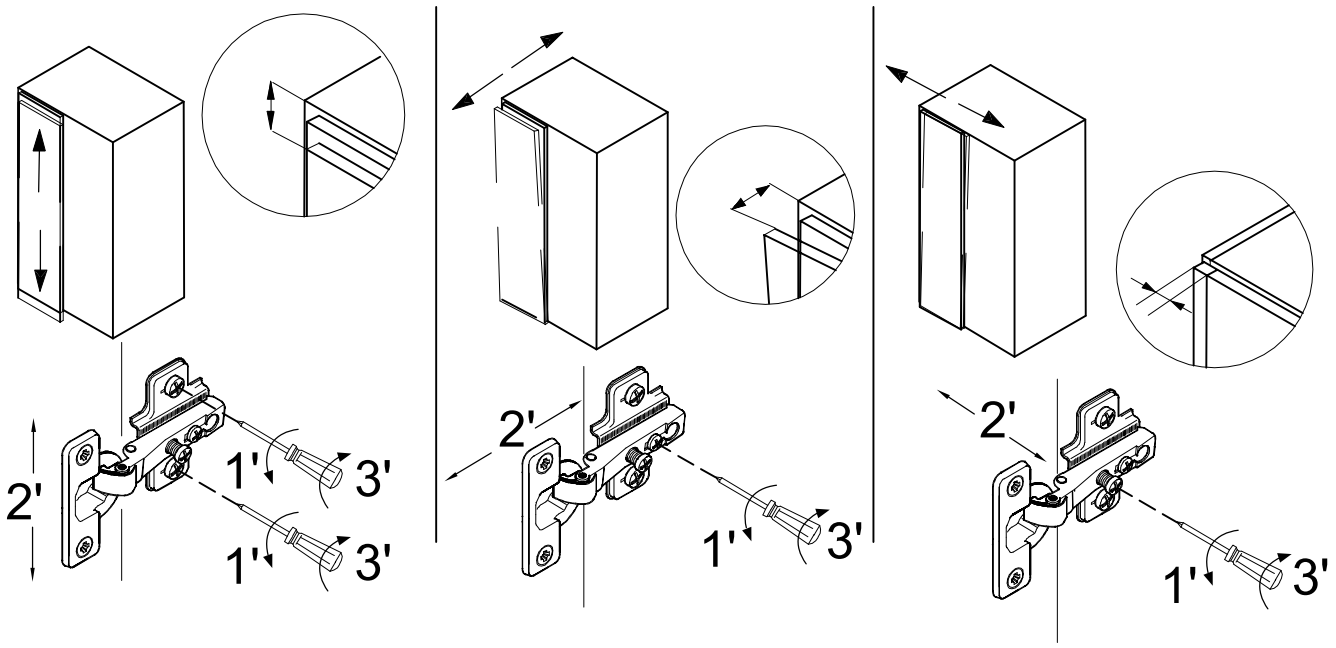
2'
1'
3'
1'
3'
2'
1'
3'
2'
1'
3'